Ordering Code

		6		5X	/			*

3 service ports = 3
4 service ports = 4

Rollerplunger } see
Rollerplunger } page 3 = WMR
Hand lever = WMU
Rotary knob = WMM
Lockable rotary knob = WMD
= WMDA

Spool type e.g. C, E, EA, EB etc.
see below for possible spool configurations

Series 50 to 59 = 5X
(50 to 59 = install. and connection dimensions remain unchanged)

Further details in clear text:

No desig. = NBR seals, suitable for mineral oils to DIN 51 524 (HL, HLP)
V = FPM (Viton) seals, suitable for phosphate ester (HFD-R)

No desig. = without cartridge throttle
B 08 = 0.8 mm dia. throttle
B 10 = 1.0 mm dia. throttle
B 12 = 1.2 mm dia. throttle

No desig. = with spring return (available for WMR, WMU, WMM)
F = with detent (available for WMM, WMD, WMDA)

	WMR	WMU	WMM	WMD	WMDA
①	-	-			
②				-	-

Spool Types

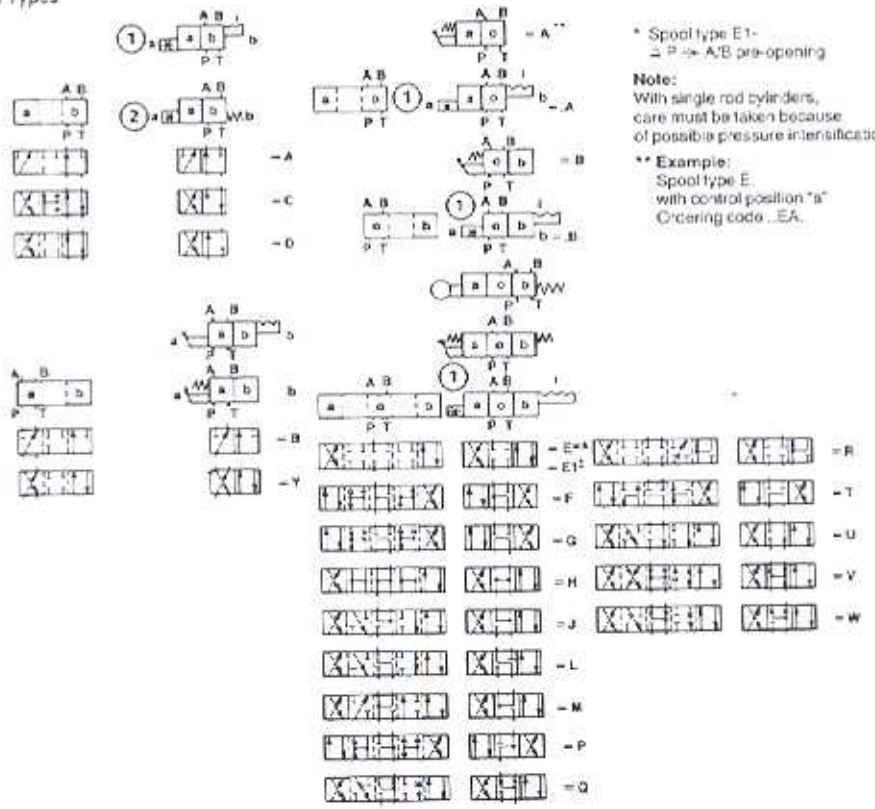

* Spool type E1-
≙ P → A/B pre-opening

Note:
With single rod cylinders, care must be taken because of possible pressure intensification.

** **Example:**
Spool type E
with control position "a"
Ordering code ...EA.

Unit Dimensions (Dimensions in mm)

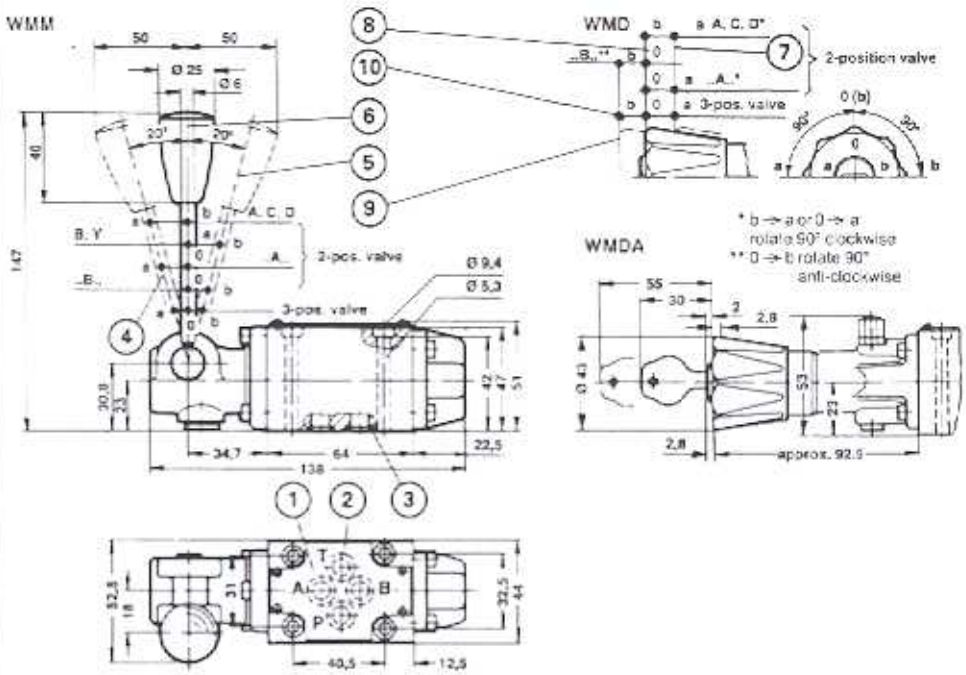

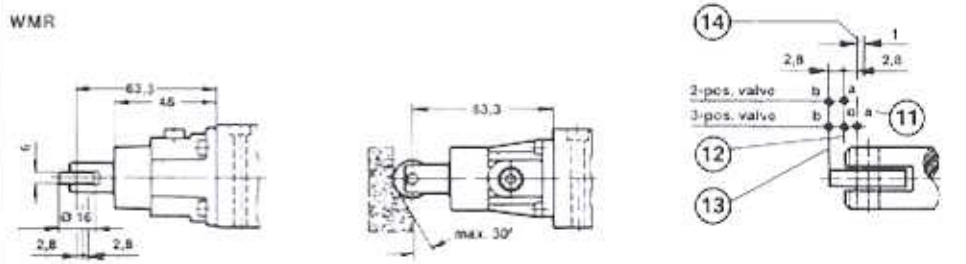

1 Nameplate
2 Porting pattern to DIN 24340 Form A8
Subplates G 341/01 (1/4" BSP), G 342/01 (3/8" BSP), G 502/01 (1/2" BSP) to data sheet RE 45 052 and valve fixing screws M5 x 50 DIN 912-10.9, tightening torque 9 Nm must be ordered separately
3 O-ring 9.25 x 1.78 for ports A, B, P and T

Valve type WMM
4 Control position a
5 Control position b
6 Control positions 0, a and b (a and b for 2-position valves)

Valve type WMD/WMDA
7 Control position a
8 Control positions 0 and b (b for 2-position valves)
9 Control position b
10 Oper. angle 90° clockw. and 90° anti-clockw. for 3-pos. valves

Valve type WM R/U
11 Control position a
12 Control position 0 and a (a for 2-position valves)
13 Control position b
14 Overrun, may not be used as operational stroke
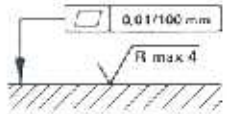
Required surface finish of mating face when mounting valve without subplate