Torqmotor MAB

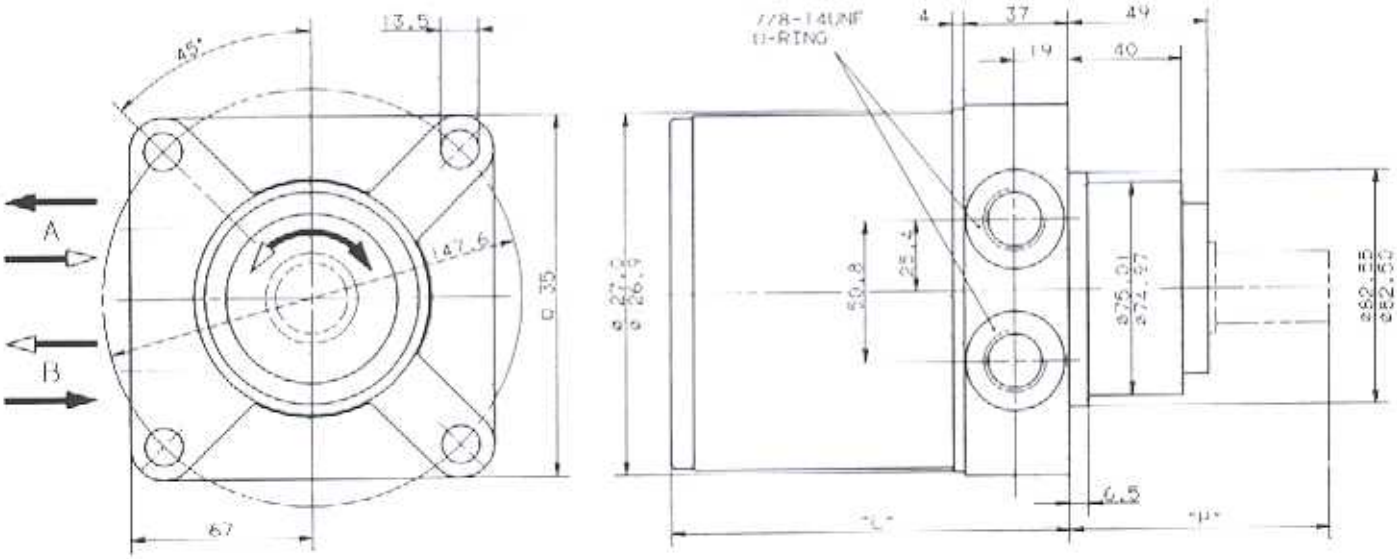

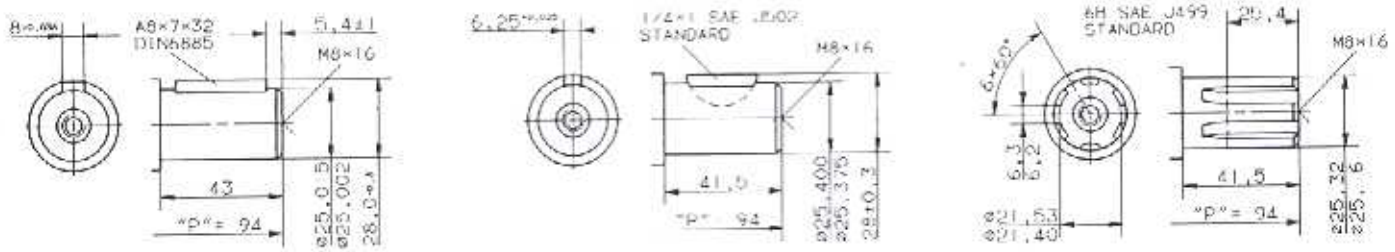

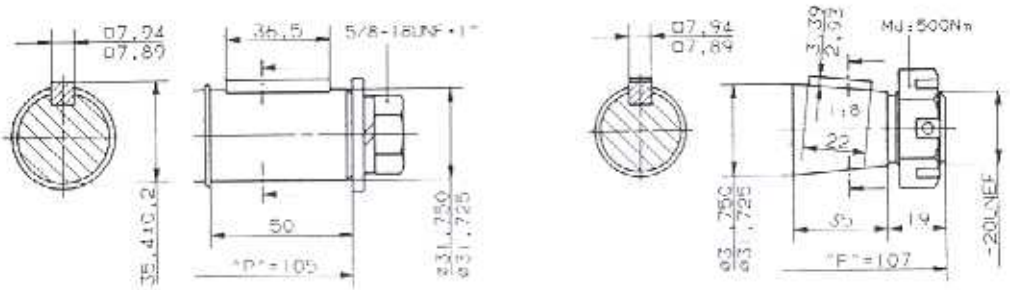

	MAB 80	MAB 100	MAB 120	MAB 190	MAB 280
"L"	143	143	146	155	168